RM Series

I/O Remote Module

- Diversified I/O Configuration
- Suitable For Small Devices
- Direct Download Device I/O
- Save Space Cost

Compatible HMI Models

*PT2 & PK2 need to change the rear case

PK2 Ethernet Model

PT2 Series

IT4-22 Serise

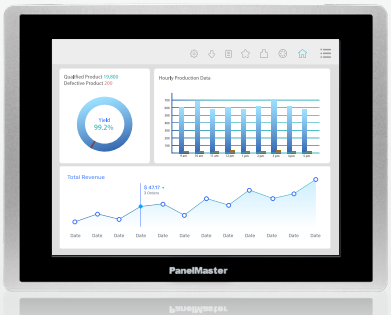

Specification

RM01-I4A1

Input	Rated Voltage	Rated Current	Maximum Load Voltage/Current
DI*4 (NPN / PNP)	DC24V	7mA	30V / 50mA
Current Input	Input Current Range		
AI*1	0-20mA		

RM02-I8R8

Input	Rated Voltage	Rated Current	Maximum Load Voltage/Current
DI*8 (NPN / PNP)	DC24V	7mA	30V / 50mA
Output	Rated Voltage	Rated Current	Maximum Resistive Load Current
DO*8 (Relay)	AC250V / DC30V	1mA	5A

RM03-A4V4C4U4

Voltage Input	Input Voltage Range	Current Input	Input Current Range
VI*4	DC0V-DC10V	AI*4	0-20mA
Voltage Output	Output Voltage Range	Current Output	Output Current Range
VO*4	DC0V-DC10V	AO*4	0-20mA

RM04-A4V4R8

Voltage Input	Input Voltage Range	Current Input	Input Current Range
VI*4	DC0V-DC10V	AI*4	0-20mA
Output	Rated Voltage	Rated Current	Maximum Resistive Load Current
DO*8 (Relay)	AC250V / DC30V	1mA	5A

RM05-V8U8

Voltage Input	Input Voltage Range
VI*8	DC0V-DC10V
Voltage Output	Output Voltage Range
VO*8	DC0V-DC10V

RM06-I8N8

Input	Rated Voltage	Rated Current	Maximum Load Voltage/Current
DI*8 (NPN / PNP)	DC24V	7mA	30V / 50mA
Output	Rated Voltage	Rated Current	Maximum Resistive Load Current
DO*8 (NPN)	DC24V	1mA	750mA

RM07-I4A4R4C4

Input	Rated Voltage	Rated Current	Maximum Load Voltage/Current
DI*4 (NPN / PNP)	DC24V	7mA	30V / 50mA
Output	Rated Voltage	Rated Current	Maximum Resistive Load Current
DO*4 (Relay)	AC250V / DC30V	1mA	5A
Current Input	Input Current Range	Current Output	Output Current Range
AI*4	0-20mA	AO*4	0-20mA

RM08-I4Q8

Input	Rated Voltage	Rated Current	Maximum Load Voltage/Current
DI*4 (NPN / PNP)	DC24V	7mA	30V / 50mA
Output	Rated Voltage	Rated Current	Maximum Resistive Load Current
DO*8 (PNP)	DC24V	1mA	750mA

Colors

V Ivory white

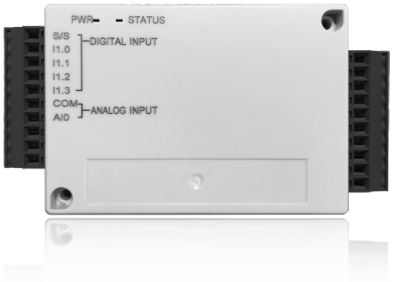

P Gray

F Silver-black

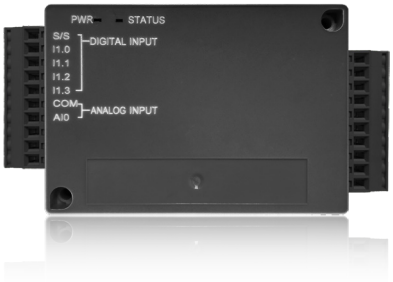

Naming Rule

RM01 – XXXXXXXXXX – P1

RM01 — Serial number 01~99

XXXXXXXXXX — There are 10 codes in the middle, add the codes in the order below, and the Substitute codes will be used if the codes are exceeded

Even Number: Quantiry

Odd Number.

DI	AI	DO	AO
I NPN/PNP	A Current Input	R Relay	C Current Output
H HSC	V Voltage Input	Q Crystal PNP	U Voltage Output
	T Temperature	N Crystal NPN	
		P Photocoupler	

P — Case Material & Color
- P Plastic/ Gray
- F Plastic/ Silver-Black
- V Front Aluminum Case/ Silver

1 — PCB Spec.
- 1 8 I/O without ADP
- 2 5 I/O without ADP
- 3 8 I/O with ADP
- 4 5 I/O with ADP

Indicators

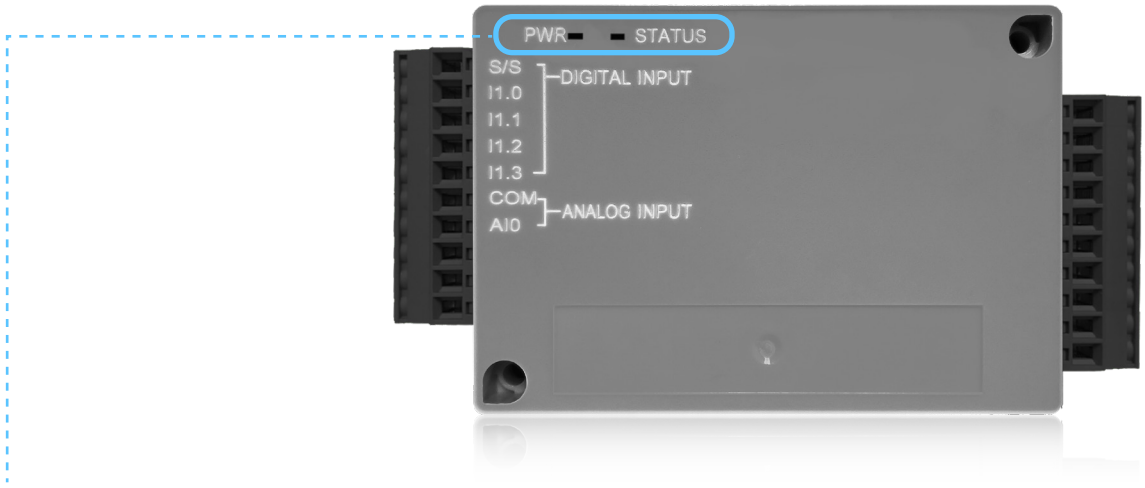

ON OFF Blink

RUN (Yellow)	STATUS (Yellow)	Description
		Run mode; The user application is running.
		Boot Loader is waiting for command.
	/	Abnormal Operating

Modbus Command for RM Modle

Cermate HMI Connection Attribute

Device/Server: PanelMaster/ Smart IO Module (RTU)
Port : COM5,115200/8/N/1

Parameter Function Lable				Description	
Address	**Modbus (RTU)**	Attribute	Range	Data type	**Description**
I1.0~I1.7	10001~10008	R	On/Off	Bit	Digital input
Q1.0~1.7	1~08	R / W	On/Off	Bit	Digital output
AI0~7	30101~30139	R	0.0~20.0mA	32 bit floating	Analog input value
AO0~7	40101~40108	R / W	0.0~20.0mA	0~4095	Analog output value
VI0~7	30101~30115	R	0.0~10.0V	32 bit floating	Voltage input value
VO0~7	40101~40108	R / W	0.0~10.0V	0~4095	Voltage output value

Digital input (DI) circuit

In RM, 4 digital inputs share a common, and they can use the SINK or SOURCE input method when wiring. SINK/SOURCE I/O circuits combine sinking and sourcing capabilities. This means that the I/O circuitry in the unit will allow current to flow in either direction, as shown below.
The common terminal connects to one polarity, and the I/O point connects to the other polarity (through the field device). This provides flexibility in making connections to your field power supply. Below are detailed electrical diagrams for sinking and sourcing configurations, showing typical input module and field device circuitry.

SINK I/O input wiring with shared commons

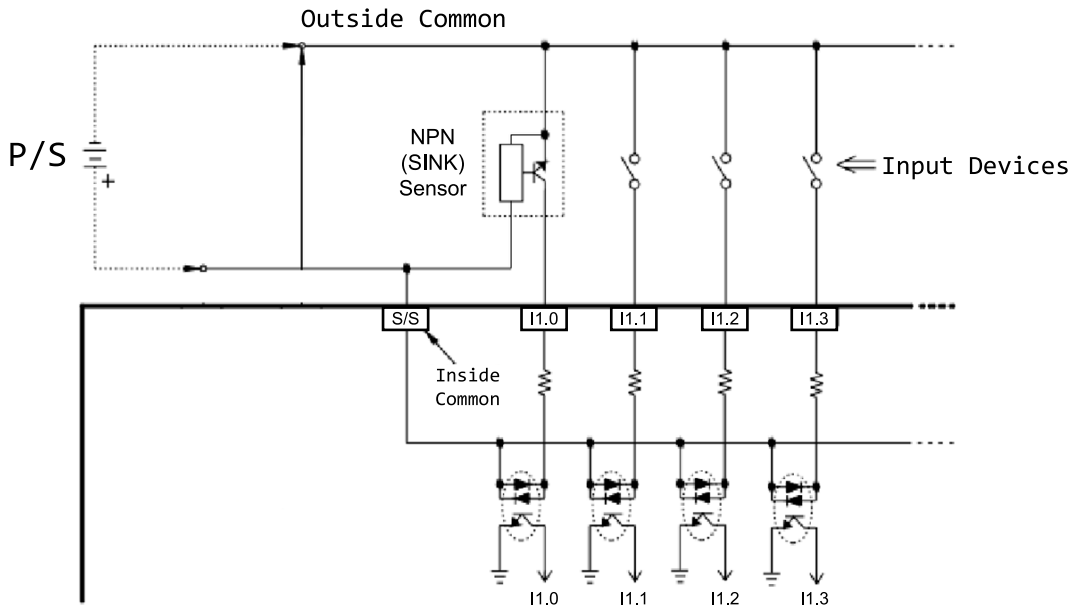

SOURCE I/O input wiring with shared commons

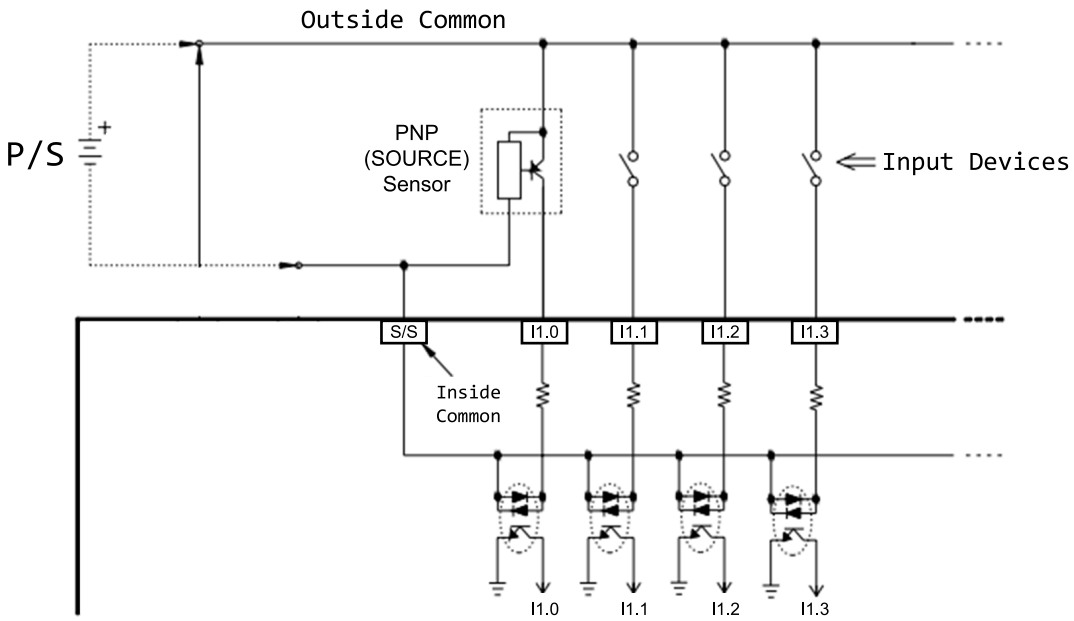

Digital output(DO) circuit

The digital output of the RM is a single-ended common output which means every output (DO) takes one terminal. However, for the output I/O to operate, you need to connect the other ends to an output common. If wiring correctly, every digital output will use this common to perform.

Single-ended output common (SINK)

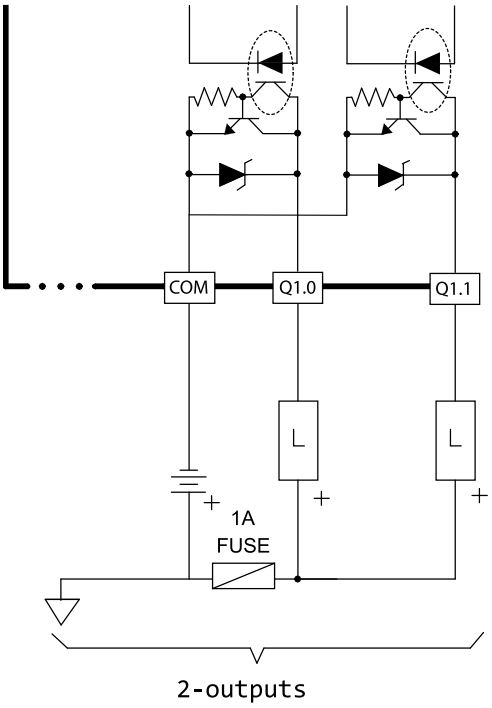

Single-ended output common (SOURCE)

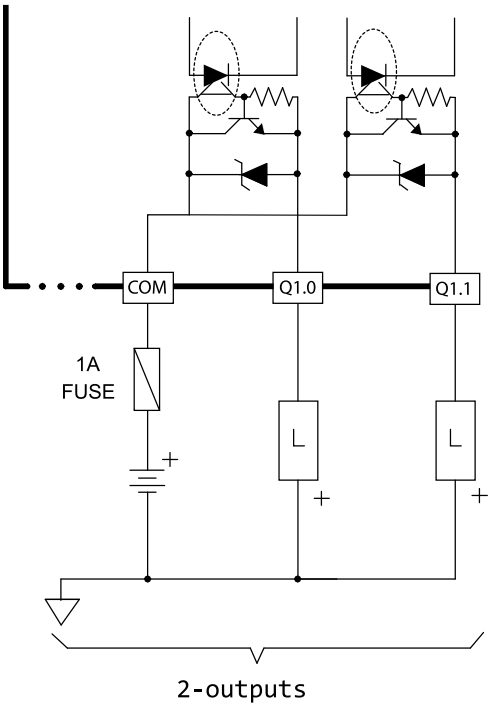

Single-ended output common (RELAY)

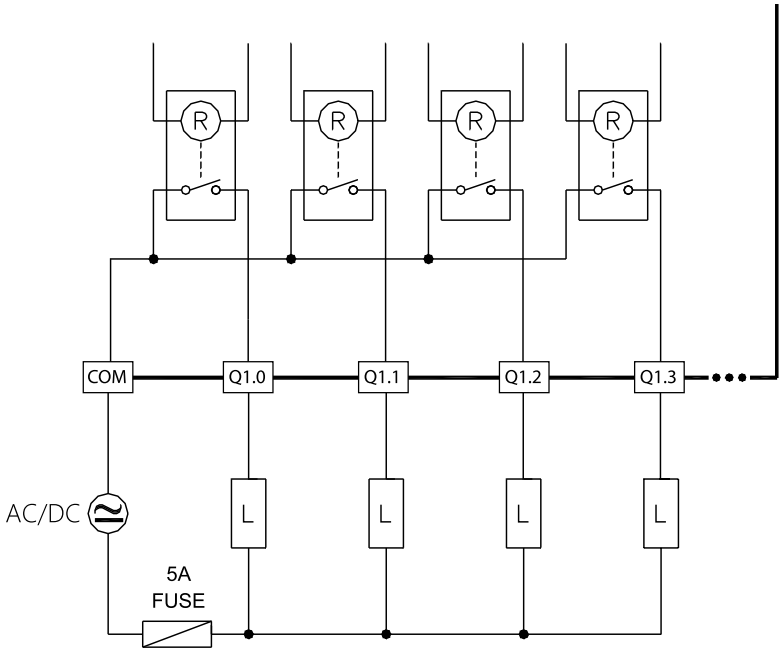

Wiring

※How to protect the digital input circuits and avoid noises※

RM module has digital transistor output circuits. Every circuit is protected by Zener diodes which not only allows current to flow from anode to cathode but also, in the reverse direction on reaching the Zener diodes voltage. This protection is enough for low inductance capacitor with low ON/OFF frequency applications, but if it's for high inductance with high ON/OFF frequency applications, it requires to apply a special circuit to reduce noises and avoid damaging the output circuits.

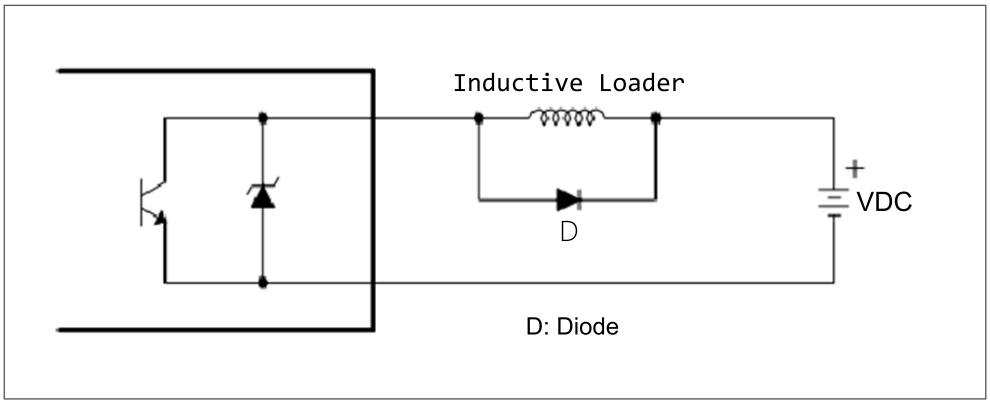

Diode Suppression (Low power consumption)

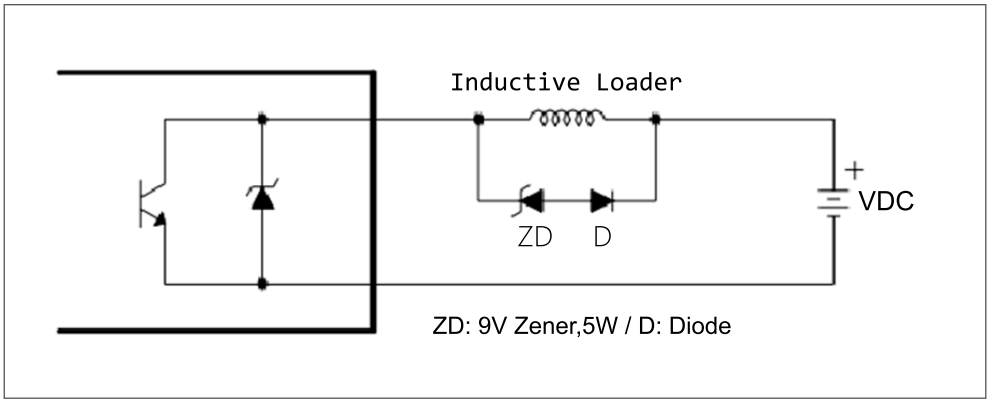

Diode+Zener Suppression
(High power consumption & ON/OFF frequency)

Wiring

Analog current input circuit diagram

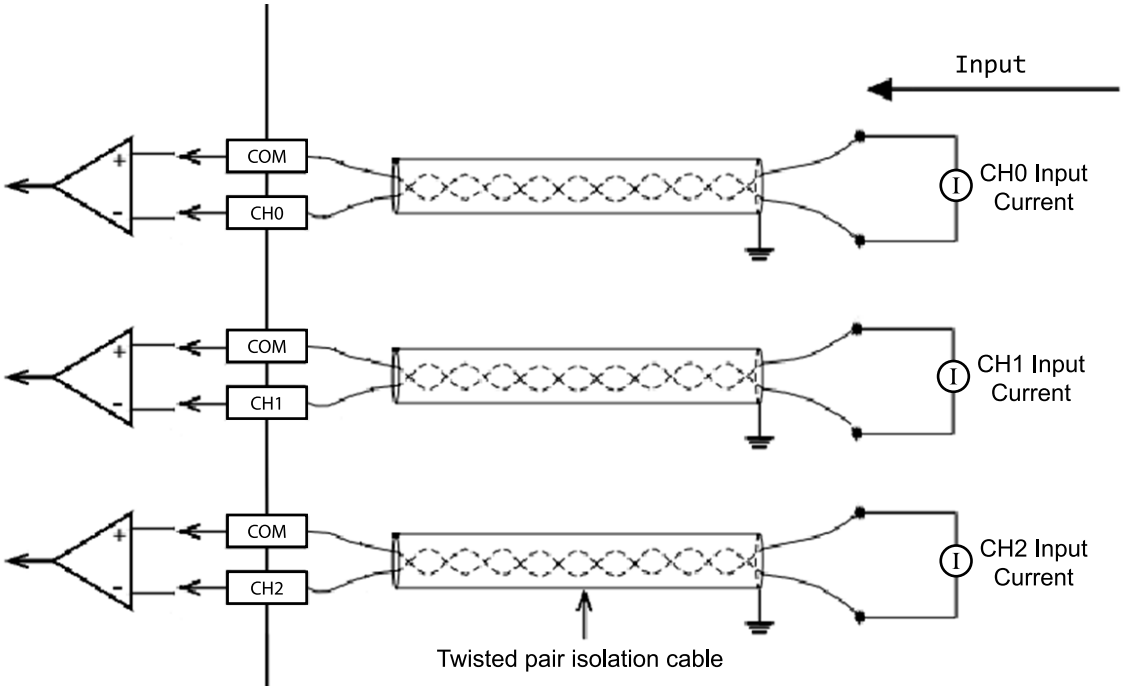

Analog voltage input circuit diagram

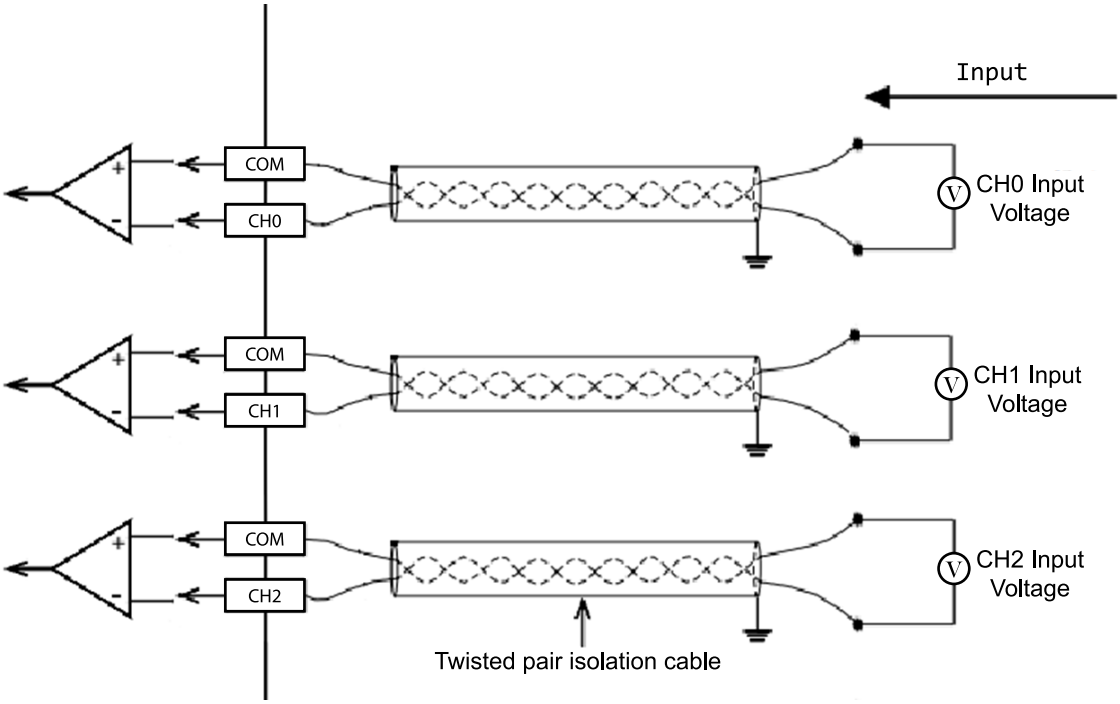

Wiring

Analog current output circuit diagram

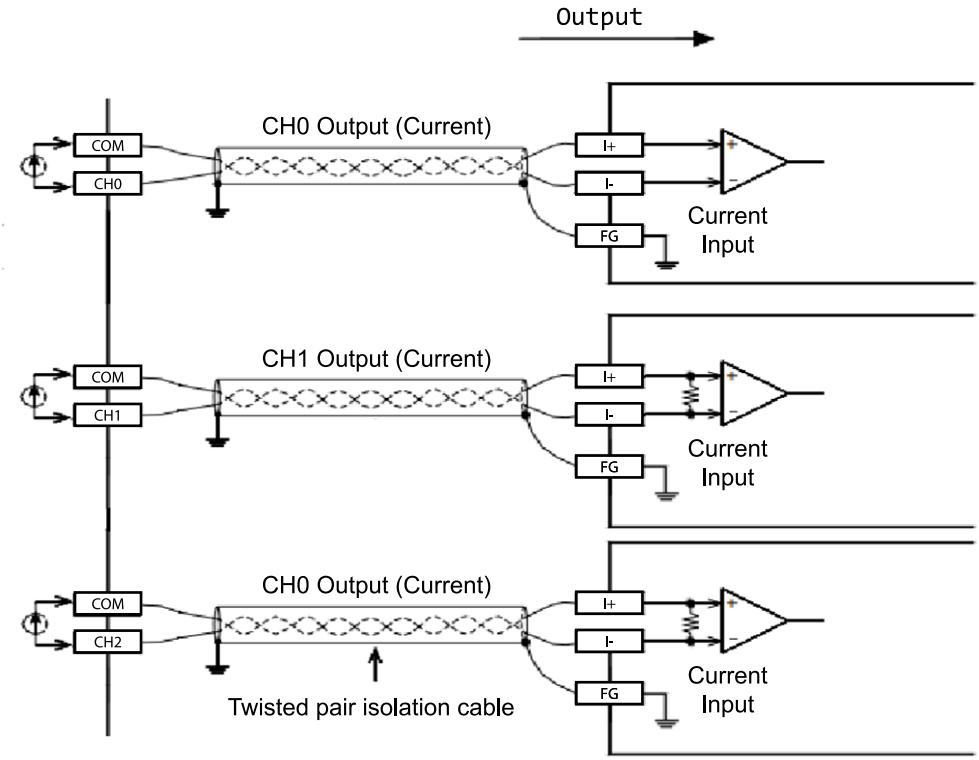

Analog voltage output circuit diagram